CREEK
TECHNICAL SERVICES, LLC

Registry No. 29824
17520 Edinburgh Dr
Tampa, FL 33647
(813) 480-3421

EVALUATION REPORT **FLORIDA BUILDING CODE, 8TH EDITION (2023)**

Issued October 18, 2023

Manufacturer: DECRA ROOFING SYSTEMS, INC
1230 Railroad Street
Corona, CA 92882
(877) 463-3272
www.decra.com

Manufacturing: Auckland, New Zealand

Quality Assurance: UL LLC (QUA9625)

SCOPE

Category: Roofing
Subcategory: Metal Roofing
Code Edition: Florida Building Code, 8th Edition (2023) including High-Velocity Hurricane Zones (HVHZ)
Code Sections: 1504.3.1, 1504.3.2, 1518.9, 1523.6.5.2.4
Properties: Wind Resistance, Physical Properties

REFERENCES

Entity	Report No.	Standard	Year
PRI Construction Materials Technologies (TST5878)	TLRC-002-02-01	TAS 125	2003
PRI Construction Materials Technologies (TST5878)	TLRC-005-02-01	TAS 100	2023
PRI Construction Materials Technologies (TST5878)	TLRC-007-02-01	ASTM G 155	2013
PRI Construction Materials Technologies (TST5878)	TLRC-008-02-01	ASTM B 117	2016
PRI Construction Materials Technologies (TST5878)	TLRC-009-02-01	TAS 125	2003
PRI Construction Materials Technologies (TST5878)	TLRC-010-02-01	TAS 125	2003
PRI Construction Materials Technologies (TST5878)	2042T0003	TAS 125	2003
UL LLC (TST9628)	SR 2909286.748415	UL 790	2004

This evaluation report is provided for State of Florida product approval under Rule 61G20-3. The manufacturer shall notify CREEK Technical Services, LLC of any product changes or quality assurance changes throughout the duration for which this report is valid. This evaluation report does not express nor imply warranty, installation, recommended use, or other product attributes that are not specifically addressed herein.

PRODUCT DESCRIPTION

Antica

Description: Preformed, fastened, stoned-coated steel panels; Coverage of 368mm x 1260mm.
Material: Min. 26 ga. ASTM A792 AZ50; F_y = min. 41 ksi; Shall conform with FBC Section 1507.4.3

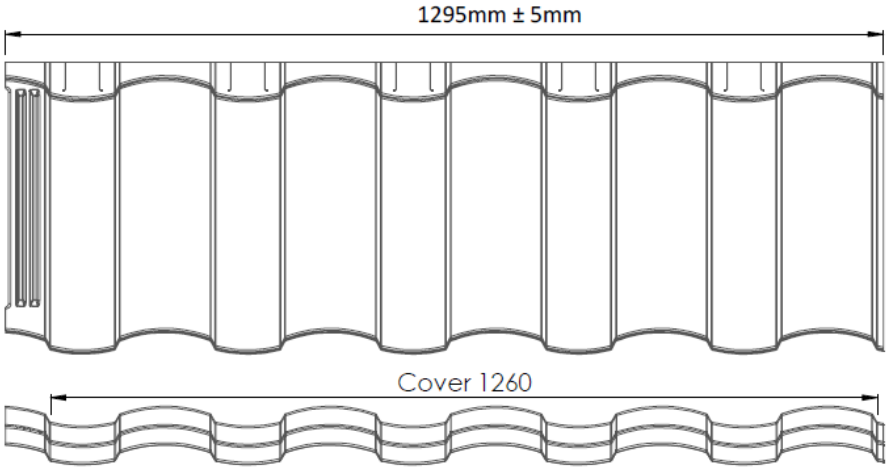

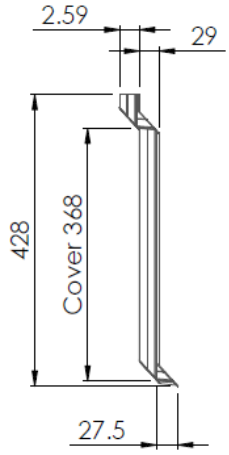

Bond

Description: Preformed, fastened, stoned-coated steel panels; Coverage of 368mm x 1265mm.
Material: Min. 26 ga. ASTM A792 AZ50; F_y = min. 41 ksi; Shall conform with FBC Section 1507.4.3

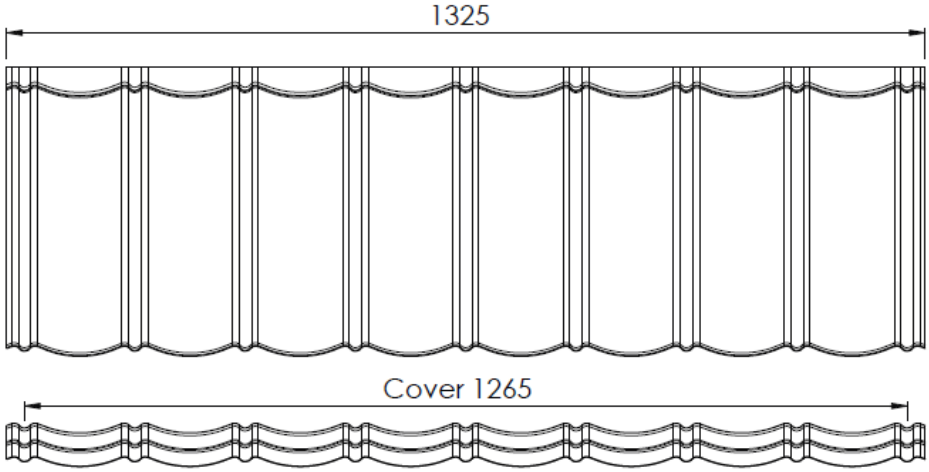

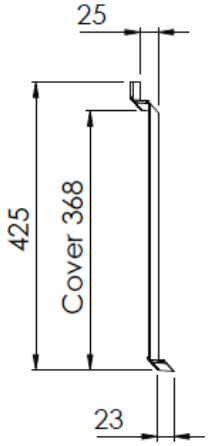

This evaluation report is provided for State of Florida product approval under Rule 61G20-3. The manufacturer shall notify CREEK Technical Services, LLC of any product changes or quality assurance changes throughout the duration for which this report is valid. This evaluation report does not express nor imply warranty, installation, recommended use, or other product attributes that are not specifically addressed herein.

Classic

Description: Preformed, fastened, stoned-coated steel panels; Coverage of 368mm x 1262mm.
Material: Min. 26 ga. ASTM A792 AZ50; F_y = min. 41 ksi; Shall conform with FBC Section 1507.4.3

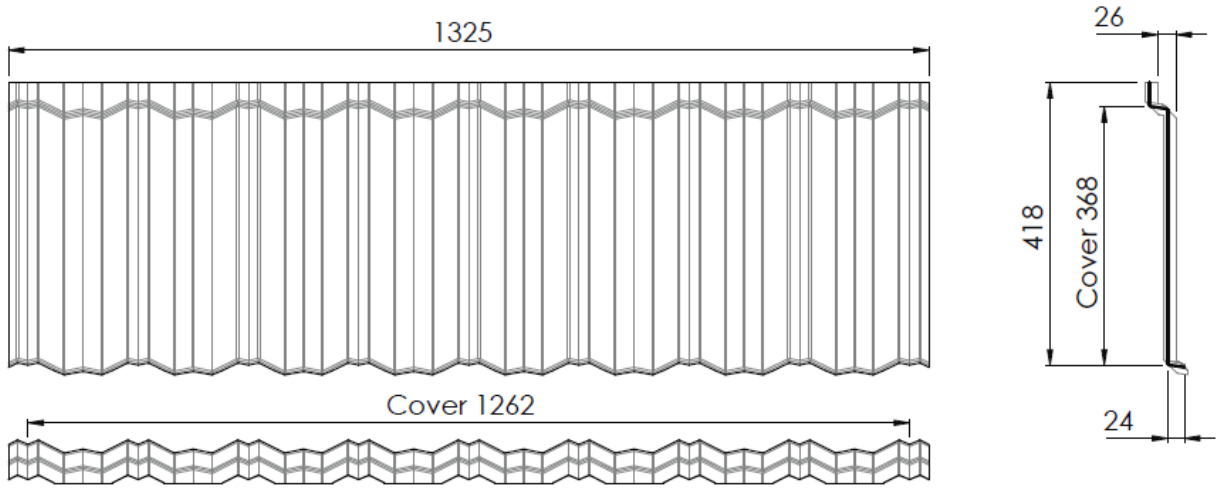

Craftsman Shake

Description: Preformed, fastened, stoned-coated steel panels; Coverage of 368mm x 1260mm.
Material: Min. 26 ga. ASTM A792 AZ50; F_y = min. 41 ksi; Shall conform with FBC Section 1507.4.3

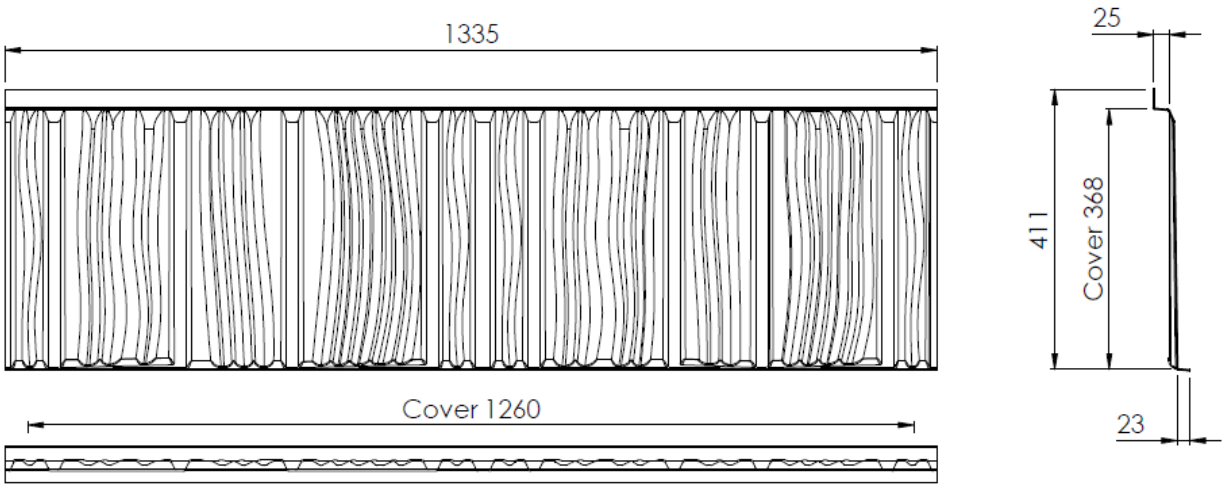

This evaluation report is provided for State of Florida product approval under Rule 61G20-3. The manufacturer shall notify CREEK Technical Services, LLC of any product changes or quality assurance changes throughout the duration for which this report is valid. This evaluation report does not express nor imply warranty, installation, recommended use, or other product attributes that are not specifically addressed herein.

Royal

Description: Preformed, fastened, stoned-coated steel panels; Coverage of 368mm x 1260mm.
Material: Min. 26 ga. ASTM A792 AZ50; F_y = min. 41 ksi; Shall conform with FBC Section 1507.4.3

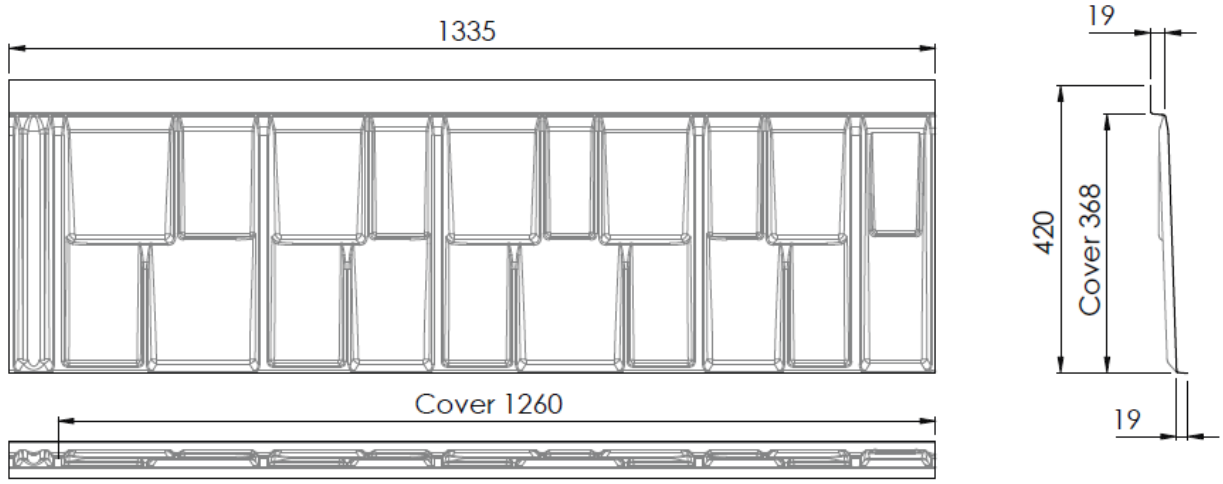

Tudor

Description: Preformed, fastened, stoned-coated steel panels; Coverage of 368mm x 1265mm.
Material: Min. 26 ga. ASTM A792 AZ50; F_y = min. 41 ksi; Shall conform with FBC Section 1507.4.3

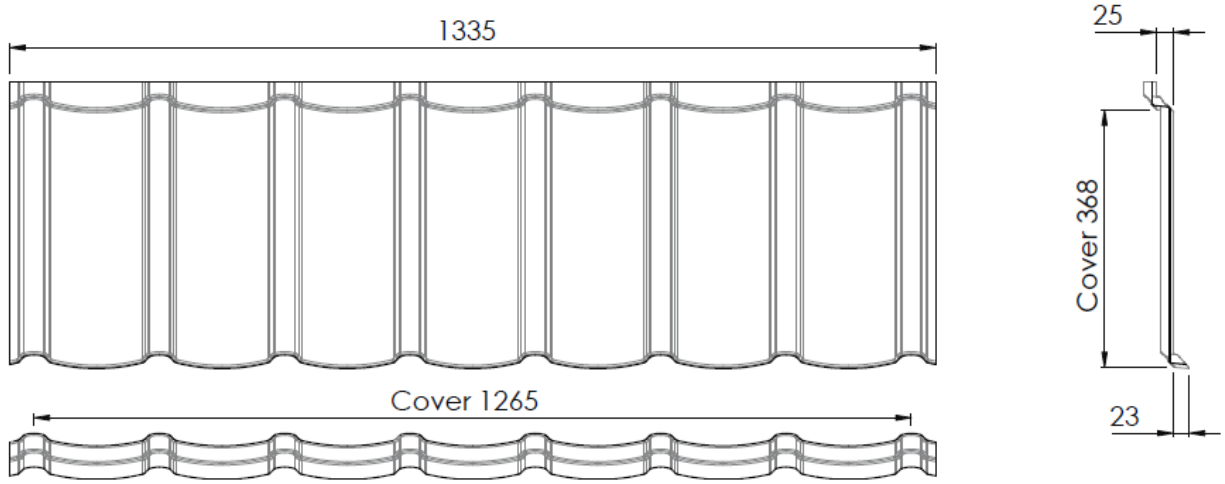

This evaluation report is provided for State of Florida product approval under Rule 61G20-3. The manufacturer shall notify CREEK Technical Services, LLC of any product changes or quality assurance changes throughout the duration for which this report is valid. This evaluation report does not express nor imply warranty, installation, recommended use, or other product attributes that are not specifically addressed herein.

APPROVED ASSEMBLIES

System 1 – Antica, Bond, Classic, Craftsman Shake, Royal or Tudor (over battens)	
Roof Deck:	Solid or closely fitted min. 15/32 in. plywood sheathing for new and existing construction at max. 24 in. span; In the HVHZ, new construction shall be min. 19/32 in. plywood at max. 24 in. span; Designed by others in accordance with FBC requirements.
Underlayment:	Installed in accordance with FBC requirements. In the HVHZ, the minimum underlayment shall be ASTM D 226, Type II installed in accordance with Sections 1518.2 and 1518.4 with nails and tin caps per 1517.5 or any approved underlayment for use in the HVHZ. In the HVHZ, a full sheet of *approved* ASTM D 1970 self-adhering underlayment shall be installed under the valley metal, and 18 in. wide sections shall be installed at the eave and rake edges.
Batten:	Nominal 2x2 SPF, SYP or DF fastened over underlayment perpendicular to the roof slope, under each headlap with **one (1) #9 x 3.25 in. torx, bugle head screw** spaced max. 24 in. o.c. into each rafter/truss. Maximum batten spacing is 14.5 in. o.c. Fasteners shall be corrosion resistant in accordance with sections 1507.4.4 and 1506.6. See Appendix A for fastening detail.
Attachment:	**Four (4) 0.131 in. x 2.5 in. ring shank nails** per panel secured into the panel nose through the headlap of the preceding course and into the batten; beginning 1 in. from panel end and 17 in. o.c. thereafter. Fasteners shall be of sufficient length to penetrate through the deck a min. 3/8 in. and shall be corrosion resistant in accordance with sections 1507.4.4 and 1506.6. See Appendix A for fastening detail.
Maximum Design Pressures:	**-71.25 psf** *Pressure calculated using 2:1 margin of safety per 1504.9 and 1523.4.*

Maximum Mean Roof Heights
Slopes 3:12 – 12:12

Exposure	Basic Wind Speed (mph)								
	120	130	140	150	160	170	180	190	200
Zone 1 for Gable/Hip Roofs									
B	60 ft	60 ft	60 ft	60 ft	60 ft	60 ft	46 ft	30 ft	20 ft
C	60 ft	60 ft	60 ft	55 ft	29 ft	16 ft	NA	NA	NA
D	60 ft	60 ft	50 ft	22 ft	NA	NA	NA	NA	NA
Zone 2 for Gable Roofs and Zones 2 & 3 for Hip Roofs									
B	60 ft	60 ft	60 ft	60 ft	39 ft	24 ft	16 ft	NA	NA
C	60 ft	57 ft	27 ft	NA	NA	NA	NA	NA	NA
D	59 ft	23 ft	NA	NA	NA	NA	NA	NA	NA
Zone 3 for Gable Roofs									
B	60 ft	60 ft	38 ft	22 ft	NA	NA	NA	NA	NA
C	33 ft	15 ft	NA	NA	NA	NA	NA	NA	NA
D	NA	NA	NA	NA	NA	NA	NA	NA	NA

Notes: 1) Exposure category for the structure location shall be as defined in the Florida Building Code 2) Limitations are based on an effective wind area of 10ft2 or less 3) Topographic factors such as escarpments or hills are not included in the above assessment 4) Applicable for Enclosed Buildings without overhangs 5) NA = "Not Allowed" 6) Kd = 0.85 7) Ke = 1.0 8) Projects with mean roof heights of greater than 60 ft shall be evaluated by a licensed design professional 9) See page 13 for details for dimensions and locales of Zone 1, 2, and 3 10) Vult is shown in the tables above. Design wind loads are calculated using Vasd = Vult√0.6 per 1609.3.1.

This evaluation report is provided for State of Florida product approval under Rule 61G20-3. The manufacturer shall notify CREEK Technical Services, LLC of any product changes or quality assurance changes throughout the duration for which this report is valid. This evaluation report does not express nor imply warranty, installation, recommended use, or other product attributes that are not specifically addressed herein.

System 2 – Antica, Bond, Classic, Craftsman Shake, Royal or Tudor (over battens)

Roof Deck:	Solid or closely fitted min. 15/32 in. plywood sheathing for new and existing construction at max. 24 in. span; In the HVHZ, new construction shall be min. 19/32 in. plywood at max. 24 in. span; Designed by others in accordance with FBC requirements.
Underlayment:	Installed in accordance with FBC requirements. In the HVHZ, the minimum underlayment shall be ASTM D 226, Type II installed in accordance with Sections 1518.2 and 1518.4 with nails and tin caps per 1517.5 or any approved underlayment for use in the HVHZ. In the HVHZ, a full sheet of *approved* ASTM D 1970 self-adhering underlayment shall be installed under the valley metal, and 18 in. wide sections shall be installed at the eave and rake edges.
Batten:	Nominal 2x2 SPF, SYP or DF fastened over underlayment perpendicular to the roof slope, under each headlap with **one (1) #9 x 3.25 in. torx, bugle head screw** spaced max. 24 in. o.c. into each rafter/truss. Maximum batten spacing is 14.5 in. o.c. Fasteners shall be corrosion resistant in accordance with sections 1507.4.4 and 1506.6. See Appendix A for fastening detail.
Attachment:	**Seven (7) 0.131 in. x 2.5 in. ring shank nails** per panel secured into the panel nose through the headlap of the preceding course and into the batten; beginning 1 in. from panel end and 8.5 in. o.c. thereafter. Fasteners shall be of sufficient length to penetrate through the deck a min. 3/8 in. and shall be corrosion resistant in accordance with sections 1507.4.4 and 1506.6. See Appendix A for fastening detail.
Maximum Design Pressures:	**-135 psf** *Pressure calculated using 2:1 margin of safety per 1504.9 and 1523.4.*

Maximum Mean Roof Heights
Slopes 3:12 – 12:12

Exposure	Basic Wind Speed (mph)								
	120	130	140	150	160	170	180	190	200
Zone 1 for Gable/Hip Roofs									
B	60 ft	60 ft	60 ft	60 ft	60 ft	60 ft	60 ft	60 ft	60 ft
C	60 ft	60 ft	60 ft	60 ft	60 ft	60 ft	60 ft	60 ft	60 ft
D	60 ft	60 ft	60 ft	60 ft	60 ft	60 ft	60 ft	59 ft	32 ft
Zone 2 for Gable Roofs and Zones 2 & 3 for Hip Roofs									
B	60 ft	60 ft	60 ft	60 ft	60 ft	60 ft	60 ft	60 ft	60 ft
C	60 ft	60 ft	60 ft	60 ft	60 ft	60 ft	54 ft	32 ft	19 ft
D	60 ft	60 ft	60 ft	60 ft	60 ft	42 ft	22 ft	NA	NA
Zone 3 for Gable Roofs									
B	60 ft	60 ft	60 ft	60 ft	60 ft	60 ft	60 ft	42 ft	29 ft
C	60 ft	60 ft	60 ft	60 ft	45 ft	25 ft	NA	NA	NA
D	60 ft	60 ft	60 ft	37 ft	18 ft	NA	NA	NA	NA

Notes: 1) Exposure category for the structure location shall be as defined in the Florida Building Code 2) Limitations are based on an effective wind area of 10ft2 or less 3) Topographic factors such as escarpments or hills are not included in the above assessment 4) Applicable for Enclosed Buildings without overhangs 5) NA = "Not Allowed" 6) Kd = 0.85 7) Ke = 1.0 8) Projects with mean roof heights of greater than 60 ft shall be evaluated by a licensed design professional 9) See page 13 for details for dimensions and locales of Zone 1, 2, and 3 10) Vult is shown in the tables above. Design wind loads are calculated using Vasd = Vult√0.6 per 1609.3.1.

This evaluation report is provided for State of Florida product approval under Rule 61G20-3. The manufacturer shall notify CREEK Technical Services, LLC of any product changes or quality assurance changes throughout the duration for which this report is valid. This evaluation report does not express nor imply warranty, installation, recommended use, or other product attributes that are not specifically addressed herein.

System 3 – Antica (over battens)

Roof Deck:	Solid or closely fitted min. 15/32 in., 32/16 span rated, 4-ply, Grade C-D, Exposure 1 plywood sheathing for new and existing construction at max. 24 in. span; In the HVHZ, new construction shall be min. 19/32 in. plywood at max. 24 in. span; Designed by others in accordance with FBC requirements.
Underlayment:	Installed in accordance with FBC requirements. In the HVHZ, a full sheet of *approved* ASTM D 1970 self-adhering underlayment shall be installed under the valley metal, and 18 in. wide sections shall be installed at the eave and rake edges.
Batten:	Nominal 2x2, No. 2 SYP fastened over underlayment perpendicular to the roof slope, under each headlap with **one (1) #10 x 3.5 in. wood screw** spaced max. 24 in. o.c. into each rafter/truss. Maximum batten spacing is 14.5 in. o.c. Fasteners shall be corrosion resistant in accordance with sections 1507.4.4 and 1506.6.
Attachment:	**Four (4) #10-14 x min. 2.5 in. HWH Wood-X screws with HiLo threads** per panel secured into the panel nose through the headlap of the preceding course and into the batten; beginning 1 in. from panel end and continuing in a 9.5 in. – 14 in. – 14 in. pattern thereafter. Fasteners shall be of sufficient length to penetrate through the deck a min. 3/8 in. and shall be corrosion resistant in accordance with sections 1507.4.4 and 1506.6. See Appendix A for fastening detail.
Maximum Design Pressures:	**-89.75 psf** *Pressure calculated using 2:1 margin of safety per 1504.9 and 1523.4.*

Maximum Mean Roof Heights
Slopes 3:12 – 12:12

Exposure	Basic Wind Speed (mph)								
	120	130	140	150	160	170	180	190	200
Zone 1 for Gable/Hip Roofs									
B	60 ft	60 ft	60 ft	60 ft	60 ft	60 ft	60 ft	60 ft	49 ft
C	60 ft	60 ft	60 ft	60 ft	60 ft	50 ft	28 ft	16 ft	NA
D	60 ft	60 ft	60 ft	60 ft	40 ft	20 ft	NA	NA	NA
Zone 2 for Gable Roofs and Zones 2 & 3 for Hip Roofs									
B	60 ft	60 ft	60 ft	60 ft	60 ft	58 ft	38 ft	25 ft	17 ft
C	60 ft	60 ft	60 ft	43 ft	23 ft	NA	NA	NA	NA
D	60 ft	60 ft	37 ft	17 ft	NA	NA	NA	NA	NA
Zone 3 for Gable Roofs									
B	60 ft	60 ft	60 ft	54 ft	33 ft	21 ft	NA	NA	NA
C	60 ft	46 ft	22 ft	NA	NA	NA	NA	NA	NA
D	46 ft	18 ft	NA	NA	NA	NA	NA	NA	NA

Notes: 1) Exposure category for the structure location shall be as defined in the Florida Building Code 2) Limitations are based on an effective wind area of $10ft^2$ or less 3) Topographic factors such as escarpments or hills are not included in the above assessment 4) Applicable for Enclosed Buildings without overhangs 5) NA = "Not Allowed" 6) K_d = 0.85 7) K_e = 1.0 8) Projects with mean roof heights of greater than 60 ft shall be evaluated by a licensed design professional 9) See page 13 for details for dimensions and locales of Zone 1, 2, and 3 10) V_{ult} is shown in the tables above. Design wind loads are calculated using $V_{asd} = V_{ult}\sqrt{0.6}$ per 1609.3.1.

This evaluation report is provided for State of Florida product approval under Rule 61G20-3. The manufacturer shall notify CREEK Technical Services, LLC of any product changes or quality assurance changes throughout the duration for which this report is valid. This evaluation report does not express nor imply warranty, installation, recommended use, or other product attributes that are not specifically addressed herein.

System 4 – Antica (over battens)

Roof Deck:	Solid or closely fitted min. 15/32 in., 32/16 span rated, 4-ply, Grade C-D, Exposure 1 plywood sheathing for new and existing construction at max. 24 in. span; In the HVHZ, new construction shall be min. 19/32 in. plywood at max. 24 in. span; Designed by others in accordance with FBC requirements.
Underlayment:	Installed in accordance with FBC requirements. In the HVHZ, a full sheet of *approved* ASTM D 1970 self-adhering underlayment shall be installed under the valley metal, and 18 in. wide sections shall be installed at the eave and rake edges.
Batten:	Nominal 2x2, No. 2 SYP fastened over underlayment perpendicular to the roof slope, under each headlap with two **(2) #10 x 3.5 in. wood screws** spaced max. 24 in. o.c. into each rafter/truss. Maximum batten spacing is 14.5 in. o.c. Fasteners shall be corrosion resistant in accordance with sections 1507.4.4 and 1506.6.
Attachment:	**Ten (10) #10-14 x min. 2.5 in. HWH Wood-X screws with HiLo threads** per panel secured into the panel nose through the headlap of the preceding course and into the batten; beginning 1 in. from panel end and continuing in a 4.5 in. – 5in. repeating pattern thereafter. Fasteners shall be of sufficient length to penetrate through the deck a min. 3/8 in. and shall be corrosion resistant in accordance with sections 1507.4.4 and 1506.6. See Appendix A for fastening detail.
Maximum Design Pressures:	**-168.5 psf** *Pressure calculated using 2:1 margin of safety per 1504.9 and 1523.4.*

Maximum Mean Roof Heights
Slopes 3:12 – 12:12

Exposure	Basic Wind Speed (mph)								
	120	130	140	150	160	170	180	190	200
Zone 1 for Gable/Hip Roofs									
B	60 ft	60 ft	60 ft	60 ft	60 ft	60 ft	60 ft	60 ft	60 ft
C	60 ft	60 ft	60 ft	60 ft	60 ft	60 ft	60 ft	60 ft	60 ft
D	60 ft	60 ft	60 ft	60 ft	60 ft	60 ft	60 ft	60 ft	60 ft
Zone 2 for Gable Roofs and Zones 2 & 3 for Hip Roofs									
B	60 ft	60 ft	60 ft	60 ft	60 ft	60 ft	60 ft	60 ft	60 ft
C	60 ft	60 ft	60 ft	60 ft	60 ft	60 ft	60 ft	60 ft	57 ft
D	60 ft	60 ft	60 ft	60 ft	60 ft	60 ft	60 ft	42 ft	23 ft
Zone 3 for Gable Roofs									
B	60 ft	60 ft	60 ft	60 ft	60 ft	60 ft	60 ft	60 ft	60 ft
C	60 ft	60 ft	60 ft	60 ft	60 ft	60 ft	42 ft	25 ft	15 ft
D	60 ft	60 ft	60 ft	60 ft	60 ft	32 ft	16 ft	NA	NA

Notes: 1) Exposure category for the structure location shall be as defined in the Florida Building Code 2) Limitations are based on an effective wind area of $10ft^2$ or less 3) Topographic factors such as escarpments or hills are not included in the above assessment 4) Applicable for Enclosed Buildings without overhangs 5) NA = "Not Allowed" 6) K_d = 0.85 7) K_e = 1.0 8) Projects with mean roof heights of greater than 60 ft shall be evaluated by a licensed design professional 9) See page 13 for details for dimensions and locales of Zone 1, 2, and 3 10) V_{ult} is shown in the tables above. Design wind loads are calculated using $V_{asd} = V_{ult}\sqrt{0.6}$ per 1609.3.1.

This evaluation report is provided for State of Florida product approval under Rule 61G20-3. The manufacturer shall notify CREEK Technical Services, LLC of any product changes or quality assurance changes throughout the duration for which this report is valid. This evaluation report does not express nor imply warranty, installation, recommended use, or other product attributes that are not specifically addressed herein.

System 5 – Craftsman Shake or Royal Tile (over battens)

Roof Deck:	Solid or closely fitted min. 15/32 in., 32/16 span rated, 4-ply, Grade C-D, Exposure 1 plywood sheathing for new and existing construction at max. 24 in. span; In the HVHZ, new construction shall be min. 19/32 in. plywood at max. 24 in. span; Designed by others in accordance with FBC requirements.
Underlayment:	Installed in accordance with FBC requirements. In the HVHZ, a full sheet of *approved* ASTM D 1970 self-adhering underlayment shall be installed under the valley metal, and 18 in. wide sections shall be installed at the eave and rake edges.
Batten:	Nominal 2x2, No. 2 SYP fastened over underlayment perpendicular to the roof slope, under each headlap with **one (1) #10 x 3.5 in. wood screw** spaced max. 24 in. o.c. into each rafter/truss. Maximum batten spacing is 14.5 in. o.c. Fasteners shall be corrosion resistant in accordance with sections 1507.4.4 and 1506.6.
Attachment:	**Four (4) #10-14 x min. 2 in. HWH Wood-X screws with HiLo threads** per panel secured into the panel nose through the headlap of the preceding course and into the batten; beginning 1 in. from panel end and continuing in a 12 in. o.c. pattern thereafter. Fasteners shall be of sufficient length to penetrate through the deck a min. 3/8 in. and shall be corrosion resistant in accordance with sections 1507.4.4 and 1506.6. See Appendix A for fastening detail.
Maximum Design Pressures:	**-89.75 psf** *Pressure calculated using 2:1 margin of safety per 1504.9 and 1523.4.*

Maximum Mean Roof Heights
Slopes 3:12 – 12:12

Exposure	Basic Wind Speed (mph)								
	120	130	140	150	160	170	180	190	200
Zone 1 for Gable/Hip Roofs									
B	60 ft	60 ft	60 ft	60 ft	60 ft	60 ft	60 ft	60 ft	49 ft
C	60 ft	60 ft	60 ft	60 ft	60 ft	50 ft	28 ft	16 ft	NA
D	60 ft	60 ft	60 ft	60 ft	40 ft	20 ft	NA	NA	NA
Zone 2 for Gable Roofs and Zones 2 & 3 for Hip Roofs									
B	60 ft	60 ft	60 ft	60 ft	60 ft	58 ft	38 ft	25 ft	17 ft
C	60 ft	60 ft	60 ft	43 ft	23 ft	NA	NA	NA	NA
D	60 ft	60 ft	37 ft	17 ft	NA	NA	NA	NA	NA
Zone 3 for Gable Roofs									
B	60 ft	60 ft	60 ft	54 ft	33 ft	21 ft	NA	NA	NA
C	60 ft	46 ft	22 ft	NA	NA	NA	NA	NA	NA
D	46 ft	18 ft	NA	NA	NA	NA	NA	NA	NA

Notes: 1) Exposure category for the structure location shall be as defined in the Florida Building Code 2) Limitations are based on an effective wind area of $10ft^2$ or less 3) Topographic factors such as escarpments or hills are not included in the above assessment 4) Applicable for Enclosed Buildings without overhangs 5) NA = "Not Allowed" 6) K_d = 0.85 7) K_e = 1.0 8) Projects with mean roof heights of greater than 60 ft shall be evaluated by a licensed design professional 9) See page 13 for details for dimensions and locales of Zone 1, 2, and 3 10) V_{ult} is shown in the tables above. Design wind loads are calculated using $V_{asd} = V_{ult}\sqrt{0.6}$ per 1609.3.1.

This evaluation report is provided for State of Florida product approval under Rule 61G20-3. The manufacturer shall notify CREEK Technical Services, LLC of any product changes or quality assurance changes throughout the duration for which this report is valid. This evaluation report does not express nor imply warranty, installation, recommended use, or other product attributes that are not specifically addressed herein.

System 6 – Craftsman Shake or Royal Tile (over battens)

Roof Deck:	Solid or closely fitted min. 15/32 in., 32/16 span rated, 4-ply, Grade C-D, Exposure 1 plywood sheathing for new and existing construction at max. 24 in. span; In the HVHZ, new construction shall be min. 19/32 in. plywood at max. 24 in. span; Designed by others in accordance with FBC requirements.
Underlayment:	Installed in accordance with FBC requirements. In the HVHZ, a full sheet of *approved* ASTM D 1970 self-adhering underlayment shall be installed under the valley metal, and 18 in. wide sections shall be installed at the eave and rake edges.
Batten:	Nominal 2x2, No. 2 SYP fastened over underlayment perpendicular to the roof slope, under each headlap with **two (2) #10 x 3.5 in. wood screws** spaced max. 24 in. o.c. into each rafter/truss. Maximum batten spacing is 14.5 in. o.c. Fasteners shall be corrosion resistant in accordance with sections 1507.4.4 and 1506.6.
Attachment:	**Eight (8) #10-14 x min. 2 in. HWH Wood-X screws with HiLo threads** per panel secured into the panel nose through the headlap of the preceding course and into the batten; beginning 1 in. from panel end and continuing in a 6 in. o.c. pattern thereafter. Fasteners shall be of sufficient length to penetrate through the deck a min. 3/8 in. and shall be corrosion resistant in accordance with sections 1507.4.4 and 1506.6. See Appendix A for fastening detail.
Maximum Design Pressures:	**-168.5 psf** *Pressure calculated using 2:1 margin of safety per 1504.9 and 1523.4.*

Maximum Mean Roof Heights
Slopes 3:12 – 12:12

Exposure	Basic Wind Speed (mph)								
	120	130	140	150	160	170	180	190	200
Zone 1 for Gable/Hip Roofs									
B	60 ft	60 ft	60 ft	60 ft	60 ft	60 ft	60 ft	60 ft	60 ft
C	60 ft	60 ft	60 ft	60 ft	60 ft	60 ft	60 ft	60 ft	60 ft
D	60 ft	60 ft	60 ft	60 ft	60 ft	60 ft	60 ft	60 ft	60 ft
Zone 2 for Gable Roofs and Zones 2 & 3 for Hip Roofs									
B	60 ft	60 ft	60 ft	60 ft	60 ft	60 ft	60 ft	60 ft	60 ft
C	60 ft	60 ft	60 ft	60 ft	60 ft	60 ft	60 ft	60 ft	57 ft
D	60 ft	60 ft	60 ft	60 ft	60 ft	60 ft	60 ft	42 ft	23 ft
Zone 3 for Gable Roofs									
B	60 ft	60 ft	60 ft	60 ft	60 ft	60 ft	60 ft	60 ft	60 ft
C	60 ft	60 ft	60 ft	60 ft	60 ft	60 ft	42 ft	25 ft	15 ft
D	60 ft	60 ft	60 ft	60 ft	60 ft	32 ft	16 ft	NA	NA

Notes: 1) Exposure category for the structure location shall be as defined in the Florida Building Code 2) Limitations are based on an effective wind area of $10ft^2$ or less 3) Topographic factors such as escarpments or hills are not included in the above assessment 4) Applicable for Enclosed Buildings without overhangs 5) NA = "Not Allowed" 6) K_d = 0.85 7) K_e = 1.0 8) Projects with mean roof heights of greater than 60 ft shall be evaluated by a licensed design professional 9) See page 13 for details for dimensions and locales of Zone 1, 2, and 3 10) V_{ult} is shown in the tables above. Design wind loads are calculated using $V_{asd} = V_{ult}\sqrt{0.6}$ per 1609.3.1.

This evaluation report is provided for State of Florida product approval under Rule 61G20-3. The manufacturer shall notify CREEK Technical Services, LLC of any product changes or quality assurance changes throughout the duration for which this report is valid. This evaluation report does not express nor imply warranty, installation, recommended use, or other product attributes that are not specifically addressed herein.

System 7 – Antica, Bond, Classic, Craftsman Shake, Royal or Tudor (direct to deck)

Roof Deck:	Solid or closely fitted min. 15/32 in. plywood sheathing for new and existing construction at max. 24 in. span; In the HVHZ, new construction shall be min. 19/32 in. plywood at max. 24 in. span; Designed by others in accordance with FBC requirements.
Underlayment:	Installed in accordance with FBC requirements. In the HVHZ, the minimum underlayment shall be ASTM D 226, Type II installed in accordance with Sections 1518.2 and 1518.4 with nails and tin caps per 1517.5 or any approved underlayment for use in the HVHZ. In the HVHZ, a full sheet of *approved* ASTM D 1970 self-adhering underlayment shall be installed under the valley metal, and 18 in. wide sections shall be installed at the eave and rake edges.
Deck Attachment:	**Four (4) #12-8 x min. 1.25 in. hex head screws with bonded washer** per panel secured into the headlap area at the factory-cut tabs and sheathing beginning 4 in. from the panel end and 15 in. o.c. thereafter. Fasteners shall be of sufficient length to penetrate through the deck a min. 3/8 in. and shall be corrosion resistant in accordance with sections 1507.4.4 and 1506.6. See Appendix A for fastening detail.
Stitch Attachment:	**Four (4) #9-16 x min. 1.25 in. hex head screws with bonded washer** per panel secured into the nose of the panel 1 in. from the panel end and 17 in. o.c. thereafter. Fasteners shall be corrosion resistant in accordance with sections 1507.4.4 and 1506.6. See Appendix A for fastening detail.
Maximum Design Pressures:	**-63.75 psf** *Pressure calculated using 2:1 margin of safety per 1504.9*

Maximum Mean Roof Heights
Slopes 3:12 – 12:12

Exposure	Basic Wind Speed (mph)								
	120	130	140	150	160	170	180	190	200
Zone 1 for Gable/Hip Roofs									
B	60 ft	60 ft	60 ft	60 ft	60 ft	46 ft	30 ft	20 ft	NA
C	60 ft	60 ft	60 ft	32 ft	17 ft	NA	NA	NA	NA
D	60 ft	60 ft	26 ft	NA	NA	NA	NA	NA	NA
Zone 2 for Gable Roofs and Zones 2 & 3 for Hip Roofs									
B	60 ft	60 ft	60 ft	41 ft	25 ft	16 ft	NA	NA	NA
C	60 ft	33 ft	16 ft	NA	NA	NA	NA	NA	NA
D	31 ft	NA	NA	NA	NA	NA	NA	NA	NA
Zone 3 for Gable Roofs									
B	60 ft	44 ft	25 ft	15 ft	NA	NA	NA	NA	NA
C	19 ft	NA	NA	NA	NA	NA	NA	NA	NA
D	NA	NA	NA	NA	NA	NA	NA	NA	NA

Notes: 1) Exposure category for the structure location shall be as defined in the Florida Building Code 2) Limitations are based on an effective wind area of 10ft2 or less 3) Topographic factors such as escarpments or hills are not included in the above assessment 4) Applicable for Enclosed Buildings without overhangs 5) NA = "Not Allowed" 6) Kd = 0.85 7) Ke = 1.0 8) Projects with mean roof heights of greater than 60 ft shall be evaluated by a licensed design professional 9) See page 13 for details for dimensions and locales of Zone 1, 2, and 3 10) Vult is shown in the tables above. Design wind loads are calculated using Vasd = Vult√0.6 per 1609.3.1.

This evaluation report is provided for State of Florida product approval under Rule 61G20-3. The manufacturer shall notify CREEK Technical Services, LLC of any product changes or quality assurance changes throughout the duration for which this report is valid. This evaluation report does not express nor imply warranty, installation, recommended use, or other product attributes that are not specifically addressed herein.

System 8 – Antica, Bond, Classic, Craftsman Shake, Royal or Tudor (direct to deck)

Roof Deck:	Solid or closely fitted min. 15/32 in. plywood sheathing for new and existing construction at max. 24 in. span; In the HVHZ, new construction shall be min. 19/32 in. plywood at max. 24 in. span; Designed by others in accordance with FBC requirements.
Underlayment:	Installed in accordance with FBC requirements. In the HVHZ, the minimum underlayment shall be ASTM D 226, Type II installed in accordance with Sections 1518.2 and 1518.4 with nails and tin caps per 1517.5 or any approved underlayment for use in the HVHZ. In the HVHZ, a full sheet of *approved* ASTM D 1970 self-adhering underlayment shall be installed under the valley metal, and 18 in. wide sections shall be installed at the eave and rake edges.
Deck Attachment:	**Seven (7) #12-8 x min. 1.25 in. hex head screws with bonded washer** per panel secured into the headlap area at the factory-cut tabs and sheathing beginning 4 in. from the panel end and 7.5 in. o.c. thereafter. Fasteners shall be of sufficient length to penetrate through the deck a min. 3/8 in. and shall be corrosion resistant in accordance with sections 1507.4.4 and 1506.6. See Appendix A for fastening detail.
Stitch Attachment:	**Seven (7) #9-16 x min. 1.5 in. hex head screws with bonded washer** per panel secured into the nose of the panel 1 in. from the panel end and 8.5 in. o.c. thereafter. Fasteners shall be corrosion resistant in accordance with sections 1507.4.4 and 1506.6. See Appendix A for fastening detail.
Maximum Design Pressures:	**-97.5 psf** *Pressure calculated using 2:1 margin of safety per 1504.9*

Maximum Mean Roof Heights
Slopes 3:12 – 12:12

Exposure	Basic Wind Speed (mph)								
	120	130	140	150	160	170	180	190	200
Zone 1 for Gable/Hip Roofs									
B	60 ft	60 ft	60 ft	60 ft	60 ft	60 ft	60 ft	60 ft	60 ft
C	60 ft	60 ft	60 ft	60 ft	60 ft	60 ft	43 ft	25 ft	15 ft
D	60 ft	60 ft	60 ft	60 ft	60 ft	32 ft	16 ft	NA	NA
Zone 2 for Gable Roofs and Zones 2 & 3 for Hip Roofs									
B	60 ft	60 ft	60 ft	60 ft	60 ft	60 ft	52 ft	35 ft	23 ft
C	60 ft	60 ft	60 ft	60 ft	35 ft	19 ft	NA	NA	NA
D	60 ft	60 ft	60 ft	27 ft	NA	NA	NA	NA	NA
Zone 3 for Gable Roofs									
B	60 ft	60 ft	60 ft	60 ft	45 ft	29 ft	18 ft	NA	NA
C	60 ft	60 ft	34 ft	17 ft	NA	NA	NA	NA	NA
D	60 ft	30 ft	NA	NA	NA	NA	NA	NA	NA

Notes: 1) Exposure category for the structure location shall be as defined in the Florida Building Code 2) Limitations are based on an effective wind area of 10ft2 or less 3) Topographic factors such as escarpments or hills are not included in the above assessment 4) Applicable for Enclosed Buildings without overhangs 5) NA = "Not Allowed" 6) Kd = 0.85 7) Ke = 1.0 8) Projects with mean roof heights of greater than 60 ft shall be evaluated by a licensed design professional 9) See page 13 for details for dimensions and locales of Zone 1, 2, and 3 10) Vult is shown in the tables above. Design wind loads are calculated using Vasd = Vult√0.6 per 1609.3.1.

This evaluation report is provided for State of Florida product approval under Rule 61G20-3. The manufacturer shall notify CREEK Technical Services, LLC of any product changes or quality assurance changes throughout the duration for which this report is valid. This evaluation report does not express nor imply warranty, installation, recommended use, or other product attributes that are not specifically addressed herein.

Gable Roofs		Hip Roofs
Slopes 2:12 to 6.1:12	Slopes >6.1:12 to 12:12	Slopes 2:12 to 12:12
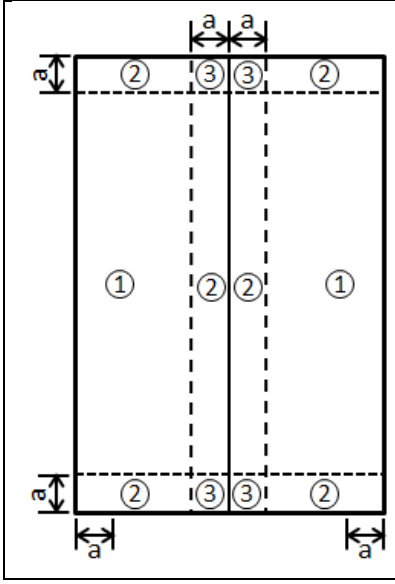	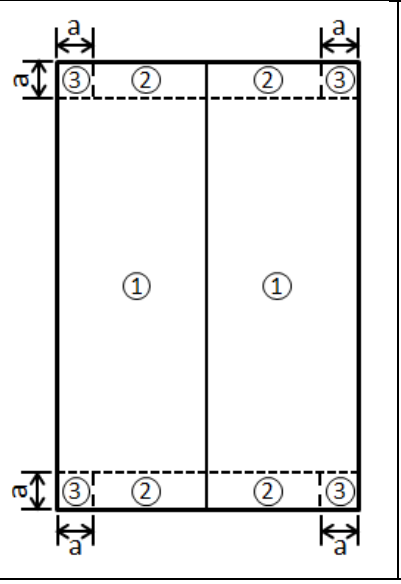	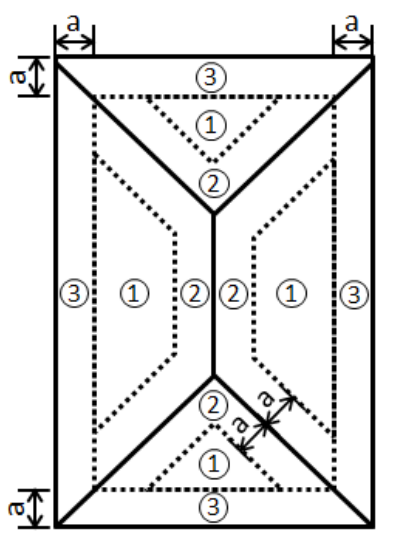

Dimension “a” shall be 10% of the least horizontal dimension or (0.4 x *Mean Roof Height)*, whichever is smaller, but not less than either 4% of the least horizontal dimension or 3ft.

LIMITATIONS

1. Fire classification is not within the scope of this evaluation.
2. The roof deck and the roof deck attachment information are provided based on testing. FBC requirements for the rational design of the roof deck, including the attachment, are not within the scope of this evaluation.
3. The minimum roof slope shall be 3:12 or greater.
4. Reroofing shall be in accordance with FBC Section 1511 outside the HVHZ and FBC Section 1521 inside the HVHZ.
5. Installation of the evaluated products shall comply with this report, the FBC and RAS 133 in the HVHZ, and the manufacturer’s published application instructions. Where discrepancies exist between these sources, the more restrictive and FBC compliant installation detail shall prevail.
6. All products listed in this report shall be manufactured under a quality assurance program in compliance with Rule 61G20-3.

This evaluation report is provided for State of Florida product approval under Rule 61G20-3. The manufacturer shall notify CREEK Technical Services, LLC of any product changes or quality assurance changes throughout the duration for which this report is valid. This evaluation report does not express nor imply warranty, installation, recommended use, or other product attributes that are not specifically addressed herein.

COMPLIANCE STATEMENT

The products evaluated herein by Zachary R. Priest, P.E. have demonstrated compliance with the Florida Building Code, 8th Edition (2023) including High-Velocity Hurricane Zones (HVHZ) as evidenced in the referenced documents submitted by the named manufacturer.

This item has been digitally signed and sealed by Zachary R. Priest, PE, on 10/18/2023.

Printed copies of this document are not considered signed and sealed and the signature must be verified on any electronic copies.

Digitally signed by Zachary R. Priest

2023.10.18 11:42:10 -04'00'

Zachary R. Priest, P.E.
Florida Registration No. 74021
Organization No. ANE9641

CERTIFICATION OF INDEPENDENCE

CREEK Technical Services, LLC does not have, nor will it acquire, a financial interest in any company manufacturing or distributing products under this evaluation.

CREEK Technical Services, LLC is not owned, operated, or controlled by any company manufacturing or distributing products under this evaluation.

Zachary R. Priest, P.E. does not have, nor will acquire, a financial interest in any company manufacturing or distributing products under this evaluation.

Zachary R. Priest, P.E. does not have, nor will acquire, a financial interest in any other entity involved in the approval process of the product.

END OF REPORT

This evaluation report is provided for State of Florida product approval under Rule 61G20-3. The manufacturer shall notify CREEK Technical Services, LLC of any product changes or quality assurance changes throughout the duration for which this report is valid. This evaluation report does not express nor imply warranty, installation, recommended use, or other product attributes that are not specifically addressed herein.

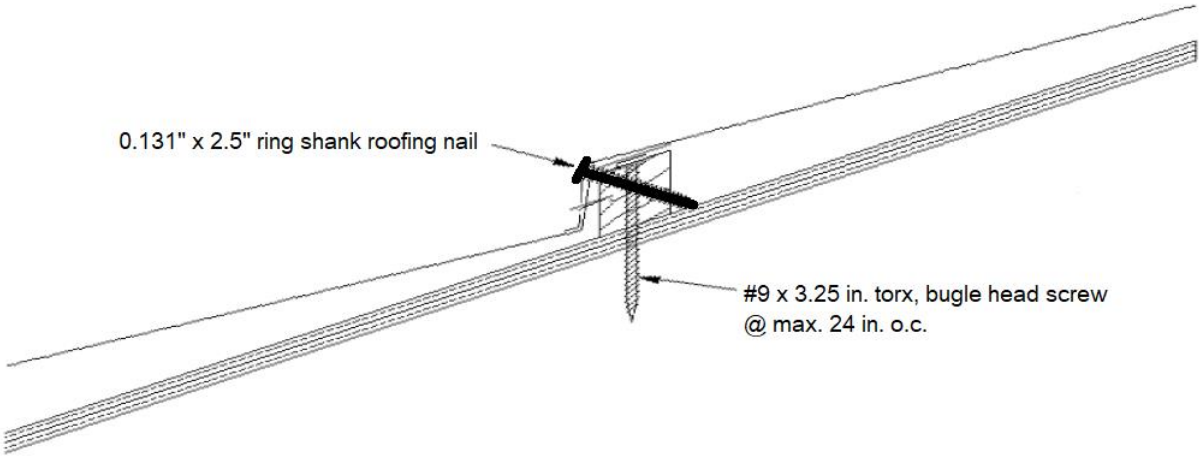

Figure 1. Over Batten Installation Detail (Systems 1 & 2)

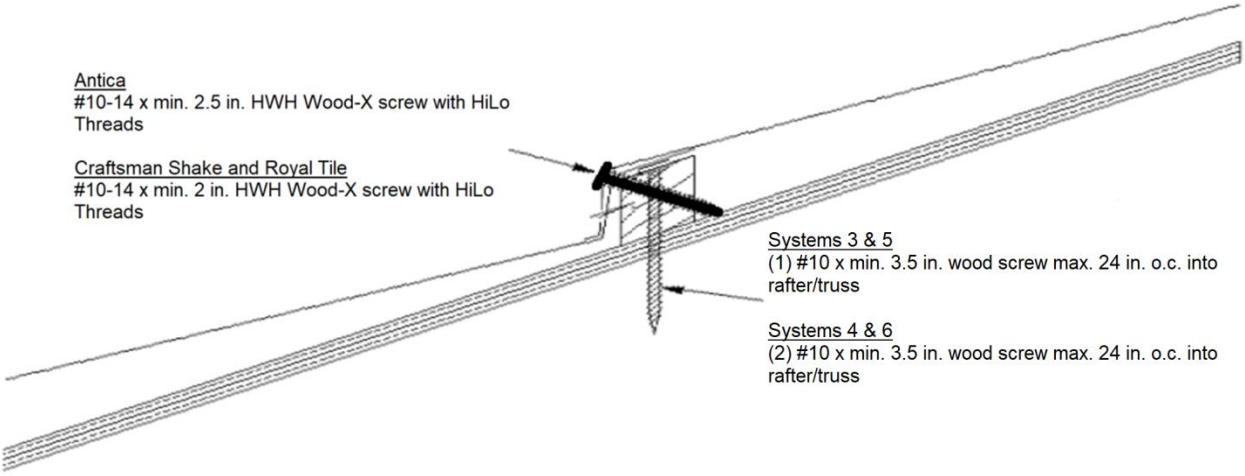

Figure 2. Over Batten Installation Detail (Systems 3 - 6)

This evaluation report is provided for State of Florida product approval under Rule 61G20-3. The manufacturer shall notify CREEK Technical Services, LLC of any product changes or quality assurance changes throughout the duration for which this report is valid. This evaluation report does not express nor imply warranty, installation, recommended use, or other product attributes that are not specifically addressed herein.

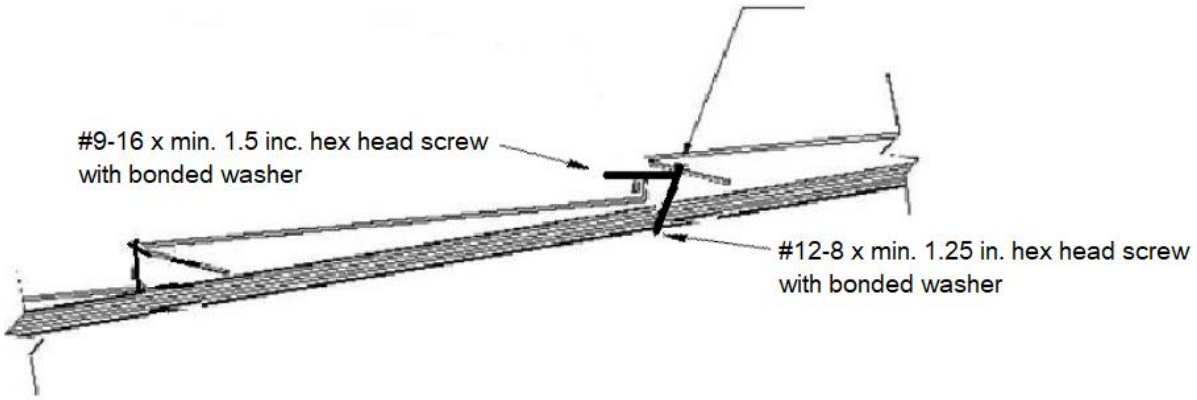

Figure 3. Direct to Deck Installation Detail (Systems 7 & 8)

This evaluation report is provided for State of Florida product approval under Rule 61G20-3. The manufacturer shall notify CREEK Technical Services, LLC of any product changes or quality assurance changes throughout the duration for which this report is valid. This evaluation report does not express nor imply warranty, installation, recommended use, or other product attributes that are not specifically addressed herein.